NOTE: DIMENSIONS LOCATED IN BOXES ARE COMMON
SETBACK DIMENSIONS FOR EACH FITTING

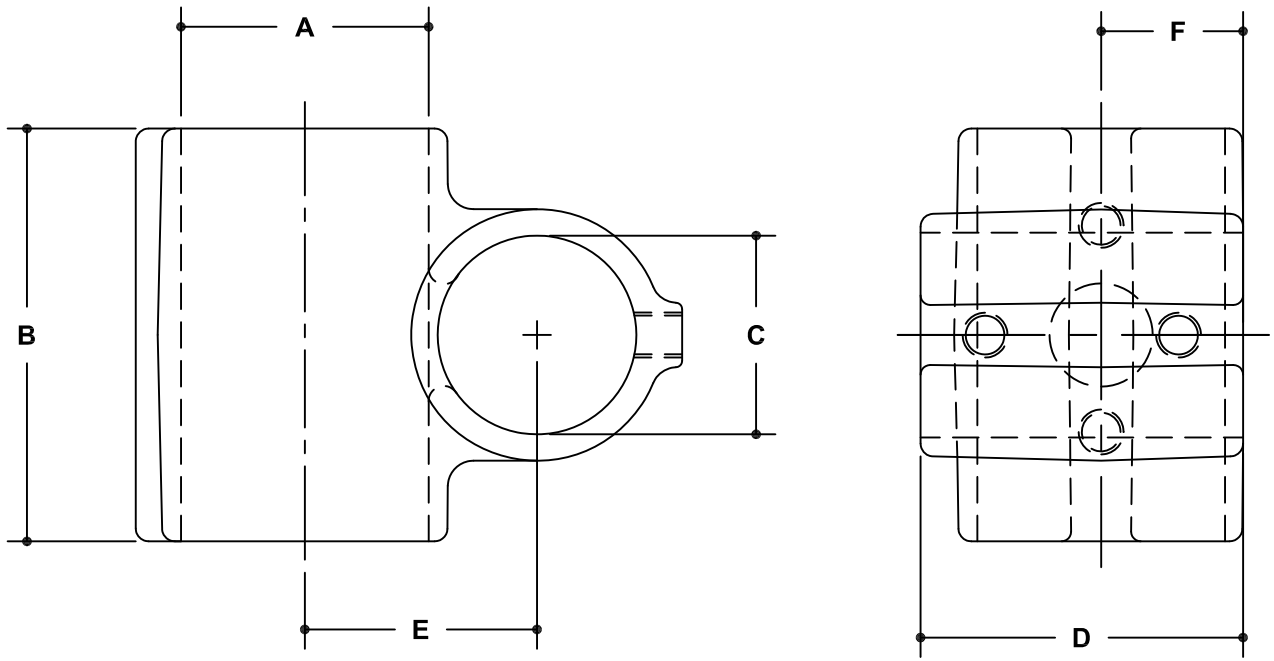

#30A Nu-Rail Reducing Cross

SCALE: HALF

ENGLISH UNITS (Inches)							
PIPE SIZE	**A**	**B**	**C**	**D**	**E**	**F**	**G**
1½"-2"	2.40	4.00	1.93	3.13	2.25	1.38	
1¼"-1½"	–	–	–	–	–		
1"-1¼"	1.68	3.50	1.34	2.75	1.61	1.00	
¾"-1"	1.34	3.00	1.07	2.25	1.31	.83	

METRIC UNITS (mm)							
PIPE SIZE	**A**	**B**	**C**	**D**	**E**	**F**	**G**
2"-1½"	61	102	49	79	57	35	
1½"-1¼"	–	–	–	–	–		
1¼"-1"	43	89	34	70	41	25	
1"-¾"	34	76	27	57	33	21	