NOTE: DIMENSIONS LOCATED IN BOXES ARE COMMON
SETBACK DIMENSIONS FOR EACH FITTING

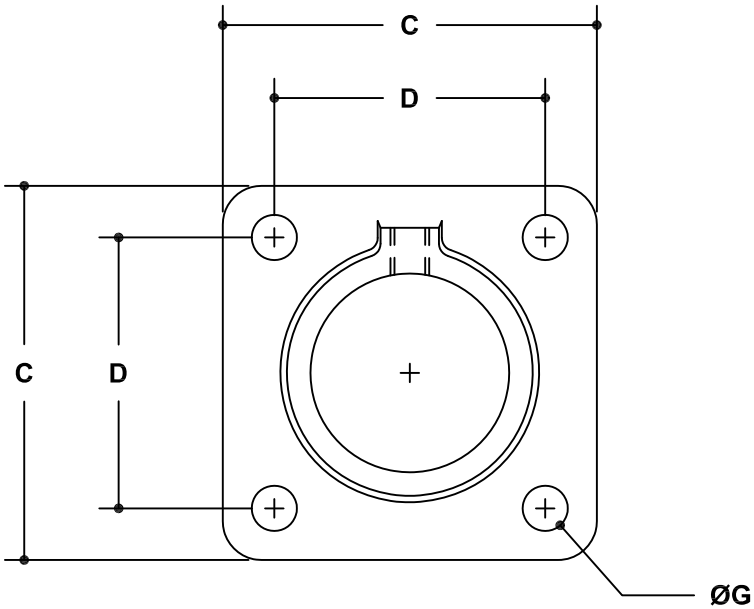

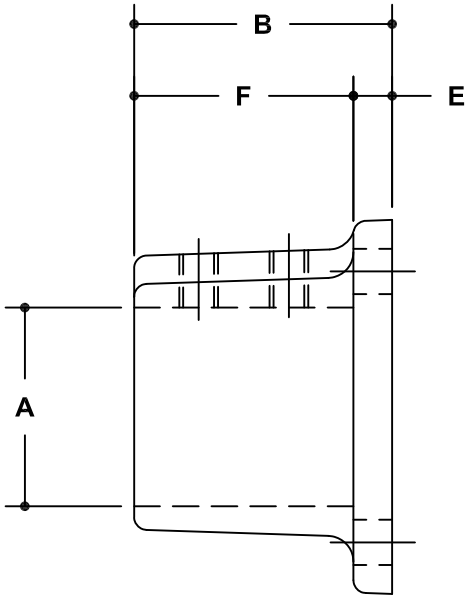

#45CE Square Base Flange

SCALE: HALF

ENGLISH UNITS (Inches)							
PIPE SIZE	**A**	**B**	**C**	**D**	**E**	**F**	**G**
1½"	1.93	2.50	3.63	2.63	0.38	2.13	0.44
1¼"	1.68	2.19	3.34	2.38	0.31	1.88	0.44

METRIC UNITS (mm)							
PIPE SIZE	**A**	**B**	**C**	**D**	**E**	**F**	**G**
1½"	49	64	92	67	10	54	12
1¼"	43	56	85	60	8	48	12